Mango24R2 Linux 기본 교육

사원 김주영

CRZ. TECHNOLOGY

목차

1. 하드웨어 사양
2. 빌드 환경 구축
3. 컴파일 방법
4. 보드에 Write하는 방법

1. 하드웨어 사양

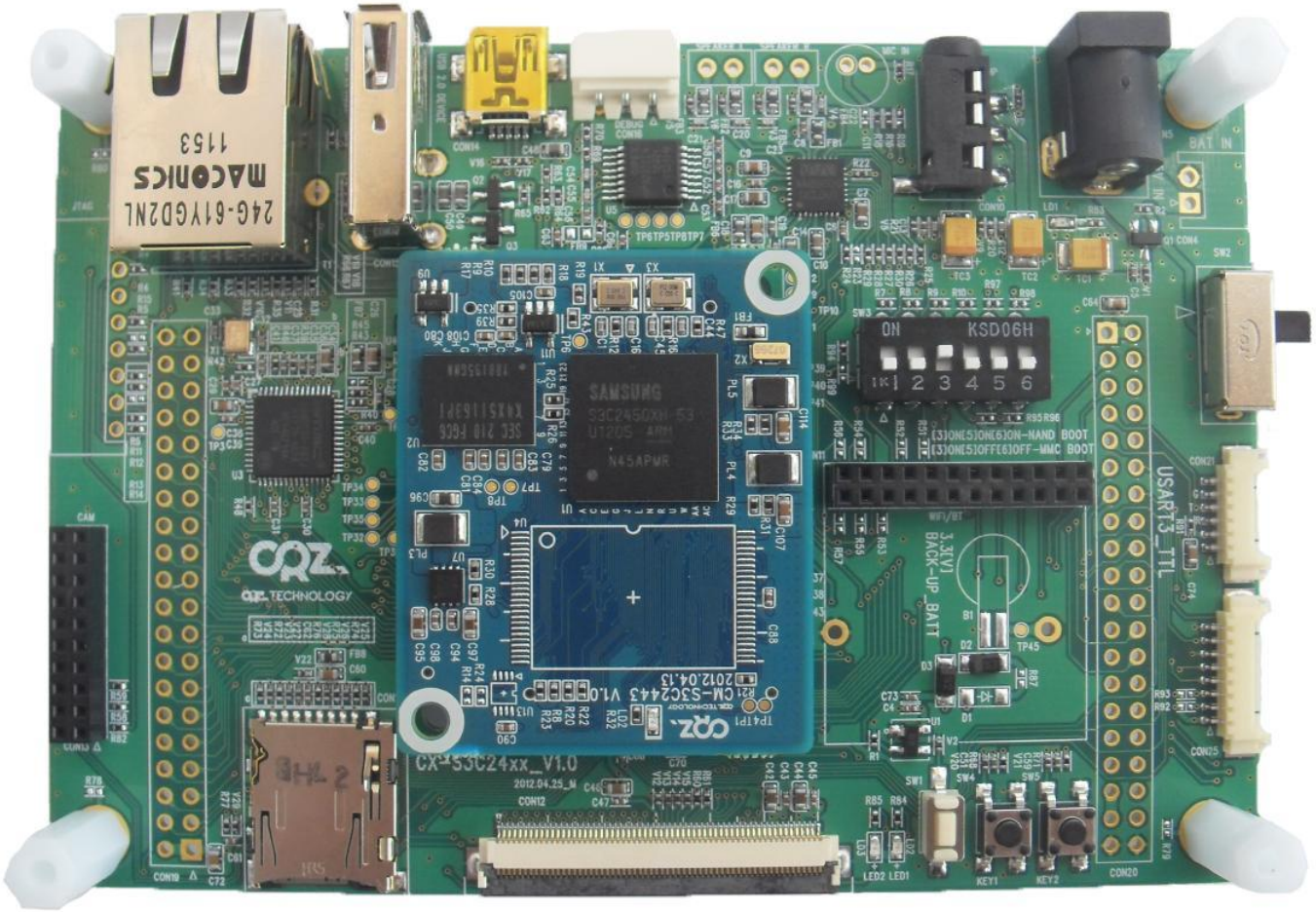

CRZ TECHNOLOGY

1. 하드웨어 사양

◆ Hardware Specification

Processor	ARM926EJ Samsung S3C2450 533Mhz
RAM	Mobile DDR 64MB
Flash	SLC NAND Flash 256MB
Display	7” 800x480 with touch
Audio	Wolfson WM8960 with 1W Stereo Speaker Amplifier
USB Host 1.1	1 Port (Full Speed)
USB Device 2.0	1 Port
SD	SD/MMC Port0 (WiFi/BT) SD/MMC Port1 (SD Boot)
WiFi/BT	SDIO 0 Channel 802.11B,G,N
Camera	1Port 1.3M Pixel Camera
UART	UART0 UART1 (Debug) UART2 (Expansion) UART3(GPS)
Sensor Interface	I2C 0 Port (3-Axis,Gyro,Light,Remocon etc)
Ethernet	SMSC LAN9220 10/100Mps Ethernet Constroller
Power	DC-JACK 5V, 1A
Button	Reset :1 , Button : 2
Boot Switch	1
LED indicator	2
Expansion Connector (80x2)	EBI,UART,I2C GPIO etc

1. 하드웨어 사양

◆ CM S3C2450 CPU Module Block Diagram

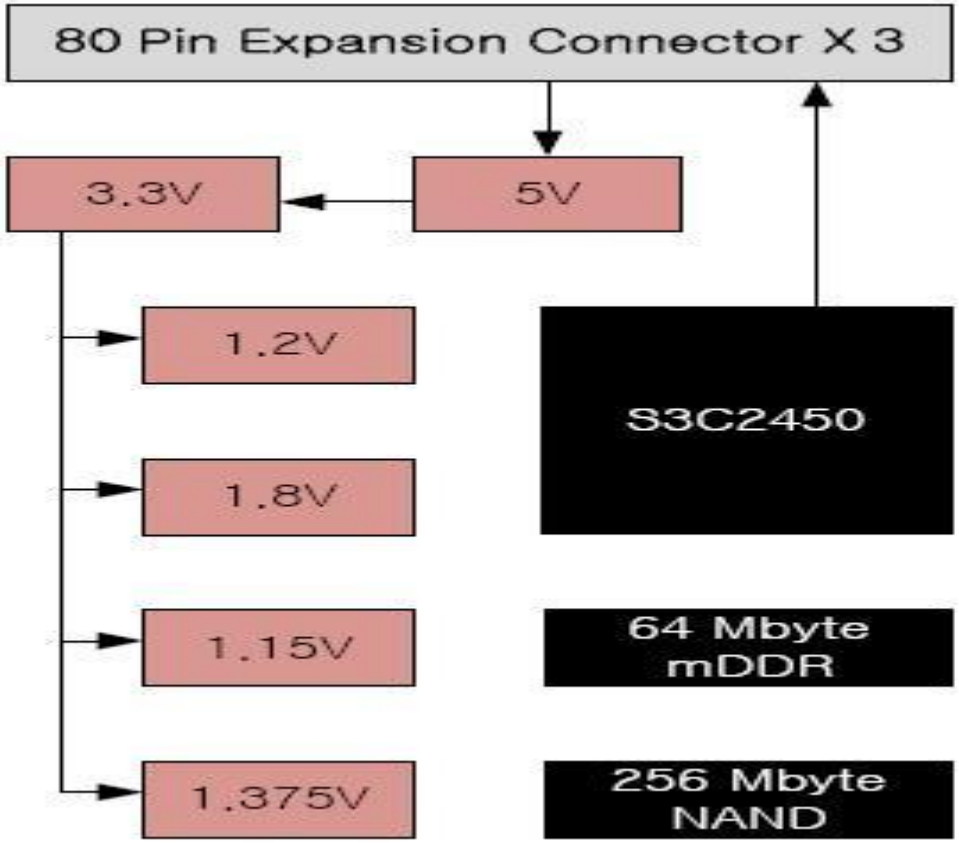

1. 하드웨어 사양

◆ CX S3C2450 Base Board Block Diagram

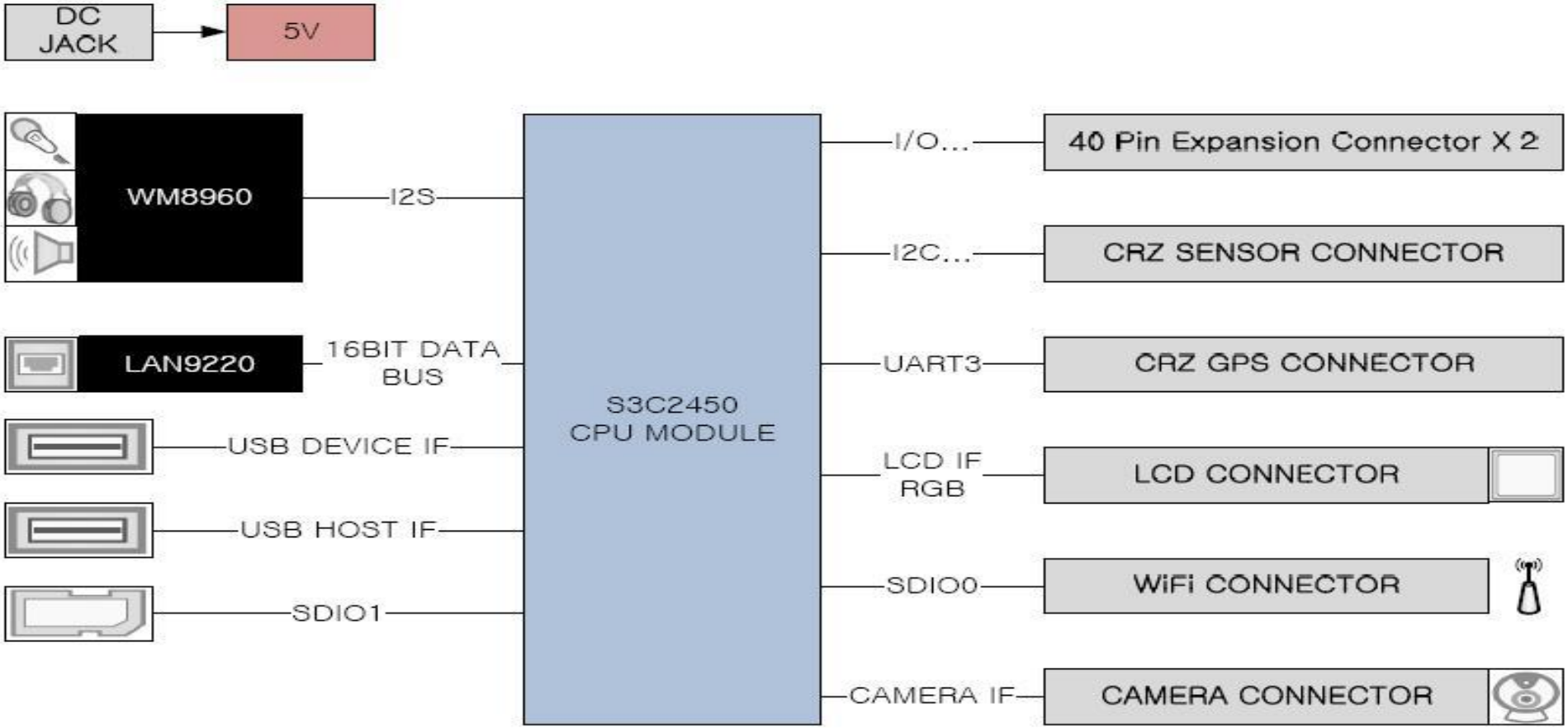

1. 하드웨어 사양

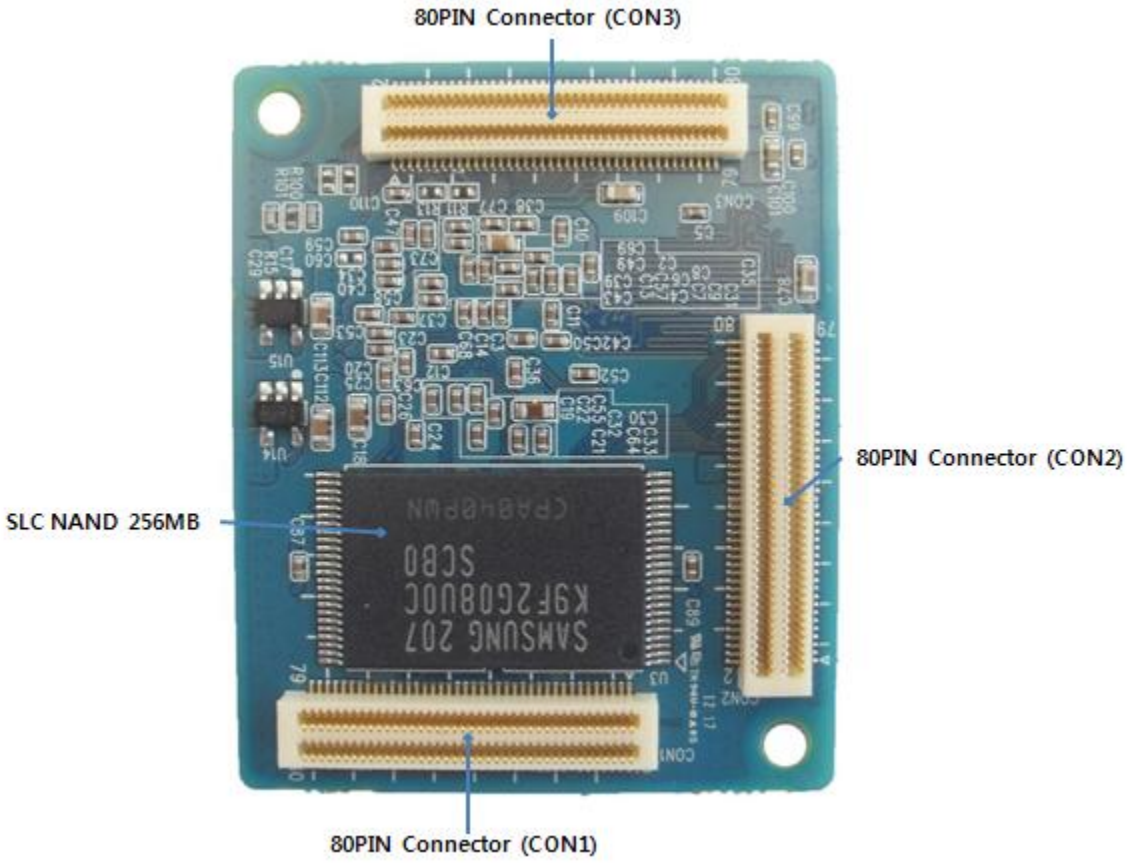
80PIN Connector (CON3)
80PIN Connector (CON2)
SLC NAND 256MB
80PIN Connector (CON1)

1. 하드웨어 사양

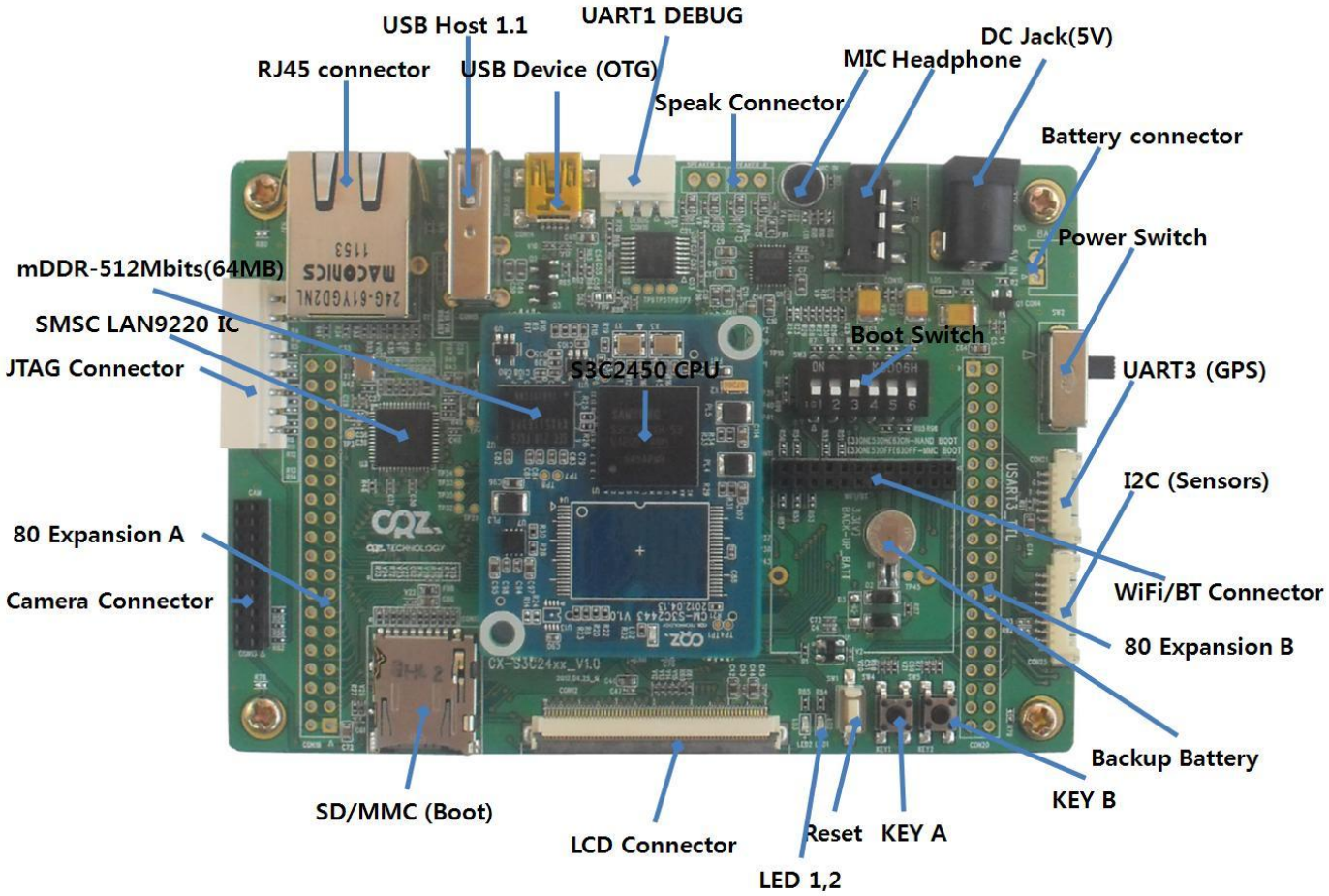
USB Host 1.1
UART1 DEBUG
DC Jack(5V)
RJ45 connector
USB Device (OTG)
MIC Headphone
Speak Connector
Battery connector
Power Switch
mDDR-512Mbits(64MB)
SMSC LAN9220 IC
Boot Switch
JTAG Connector
S3C2450 CPU
UART3 (GPS)
I2C (Sensors)
80 Expansion A
WiFi/BT Connector
Camera Connector
80 Expansion B
Backup Battery
KEY B
SD/MMC (Boot)
LCD Connector
Reset
KEY A
LED 1,2

1. 하드웨어 사양

◆ BOOT MODE

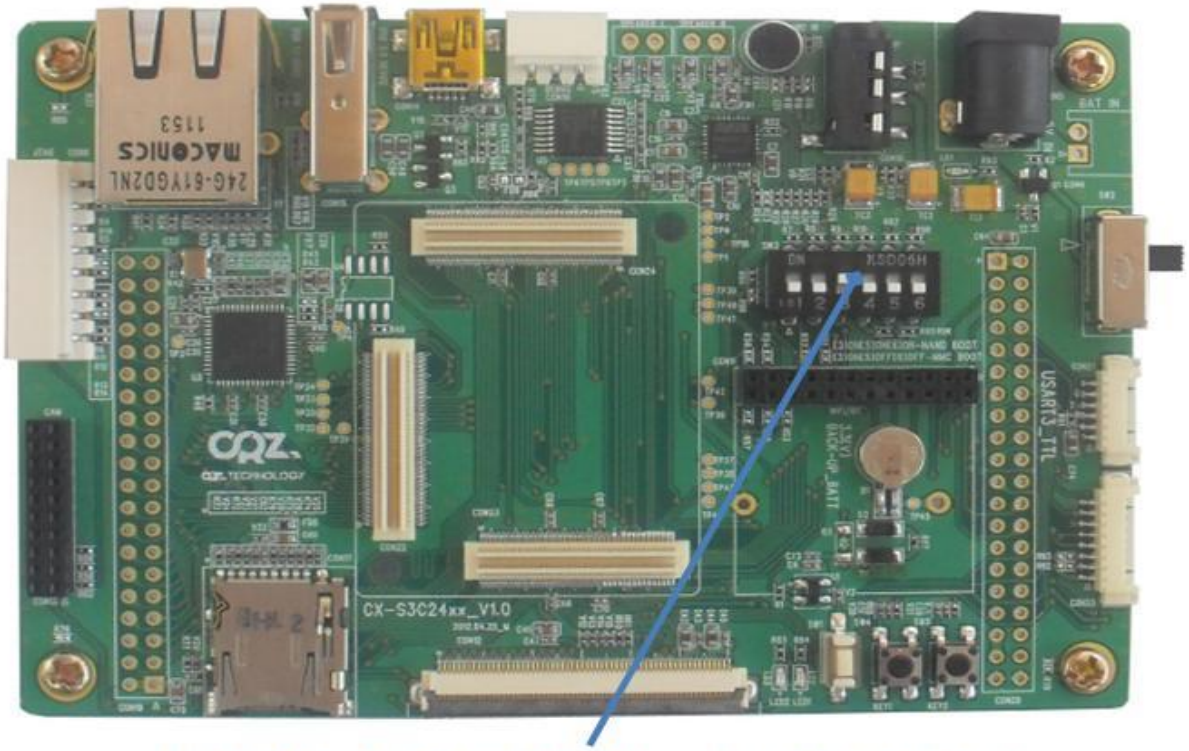

[3] ON [5] ON [6] ON -> NAND BOOT
[3] ON [5] OFF [6] OFF -> MMC BOOT

2. 빌드 환경 구축

◆ GCC Setting

Install

ib g++-4.5-multilib
ib g++-4.4-multilib

6 40 ₩

5 60 ₩

4 80 ₩

192.168.0.113 - PuTTY

```
[jooyoung@crz-server113 ~]$ sudo update-alternatives --install /usr/bin/gcc gcc /usr
/bin/gcc-4.6 40 \
> --slave /usr/bin/g++ g++ /usr/bin/g++-4.6
[jooyoung@crz-server113 ~]$ sudo update-alternatives --install /usr/bin/gcc gcc /usr
/bin/gcc-4.5 60 \
> --slave /usr/bin/g++ g++ /usr/bin/g++-4.5
[jooyoung@crz-server113 ~]$ sudo update-alternatives --install /usr/bin/gcc gcc /usr
/bin/gcc-4.4 80 \
> --slave /usr/bin/g++ g++ /usr/bin/g++-4.4
[jooyoung@crz-server113 ~]$ sudo update-alternatives --config gcc
There are 3 choices for the alternative gcc (providing /usr/bin/gcc).

  Selection    Path              Priority   Status
------------------------------------------------------------
  0            /usr/bin/gcc-4.4   80        auto mode
* 1            /usr/bin/gcc-4.4   80        manual mode
  2            /usr/bin/gcc-4.5   60        manual mode
  3            /usr/bin/gcc-4.6   40        manual mode

Press enter to keep the current choice[*], or type selection number: 0
[jooyoung@crz-server113 ~]$
```

2. 빌드 환경 구축

◆ Toolchain Install

$ cd /opt
$ sudo wget http://crztech.iptime.org:8080/Release/Toolchain/arm-2009q3-67-arm-none-linux-gnueabi-i686-pc-linux-gnu.tar.bz2
$ sudo tar xvf arm-2009q3-67-arm-none-linux-gnueabi-i686-pc-linux-gnu.tar.bz2

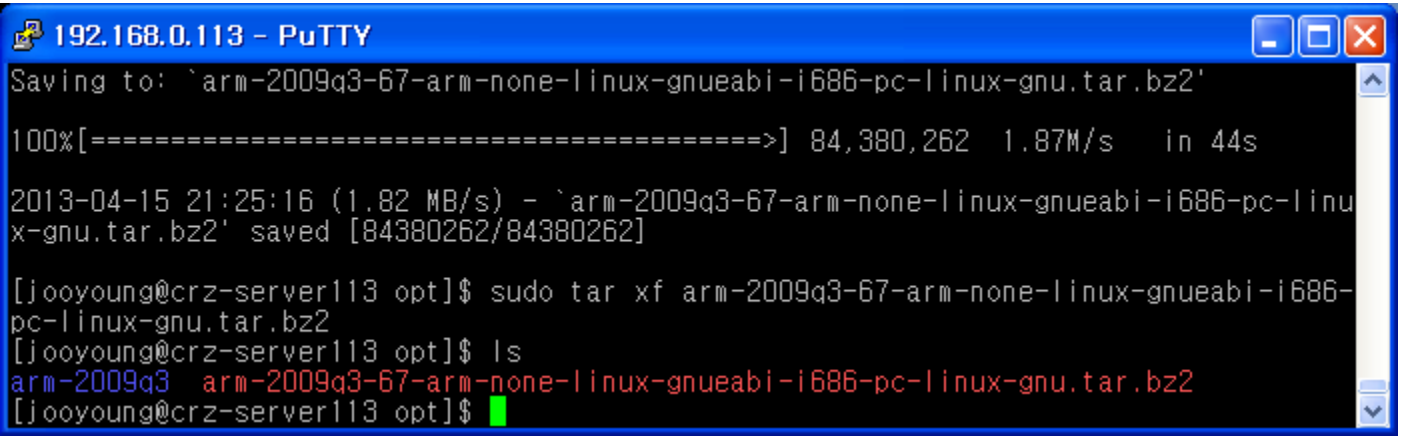

2. 빌드 환경 구축

◆ Package install

```
$ sudo apt-get install git-core gnupg flex bison gperf build-essential
$ sudo apt-get install zip curl libc6-dev x11proto-core-dev
$ sudo apt-get install  libx11-dev:i386 libreadline6-dev:i386 libgl1-mesa-dev:i386
$ sudo apt-get install g++-multilib mingw32 openjdk-6-jdk tofrodos python-markdown
$ sudo apt-get install libxml2-utils xsltproc zlib1g-dev:i386
$ sudo apt-get install gcc-multilib
$ sudo apt-get install libc6-dev-i386
$ sudo apt-get install ia32-libs
$ sudo apt-get install lib32z-dev
$ sudo apt-get install libusb-dev:i386
$ sudo apt-get install git-core bison flex g++ gettext texinfo
$ sudo apt-get install automake


$ sudo apt-get install libncurses5-dev
$ sudo apt-get install libncurses5-dev:i386
```

3. 컴파일 방법

◆ Download & install

$ wget
http://crztech.iptime.org:8080/Release/mango24R2_S3C2450/linux/m2450_kernel3.0.22_mrvl8787_Qt_130329_Rel/m2450_kernel3.0.22_mrvl8787_Qt_130329.tgz

$ tar xf m2450_kernel3.0.22_mrvl8787_Qt_130329.tgz
$ cd m2450_kernel3.0.22_mrvl8787_Qt_130329/

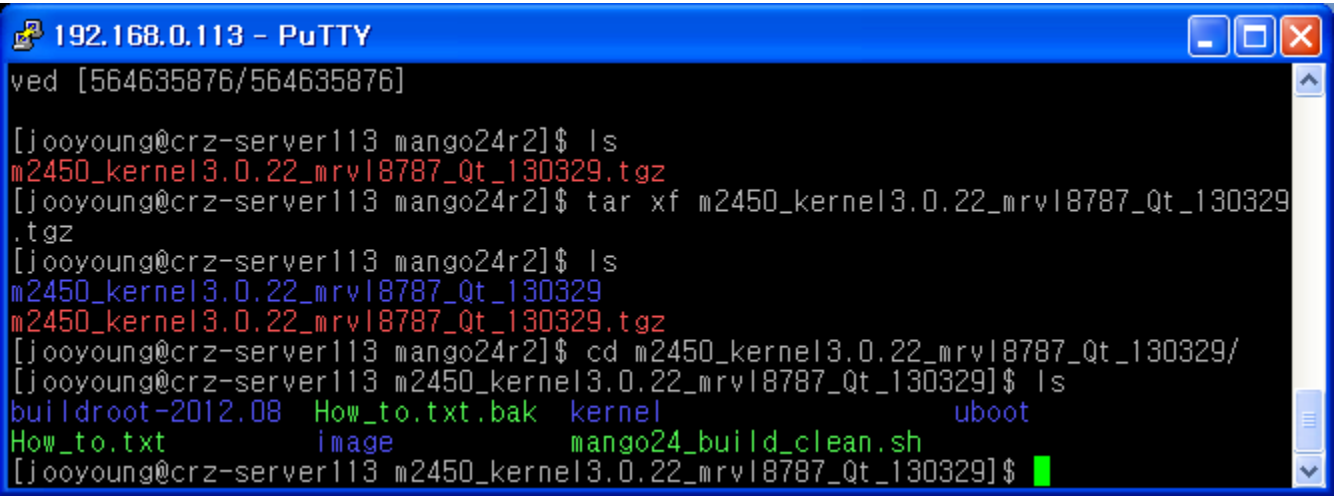

3. 컴파일 방법

◆ Uboot build

```
$ ./build_uboot clean
$ ./build_uboot config
$ ./build_uboot
```

3. 컴파일 방법

◆ Kernel build

```
$ ./build_kernel defconfig mango2450_defconfig
$ ./build_kernel
```

3. 컴파일 방법

◆ Buildroot build

$ ./build_rootFS.sh

4. 보드에 Write하는 방법

◆ SD writer

Linux PC 에 SD카드 삽입

$ sudo fdisk –l

Device Boot	Start	End	Blocks	Id	System
/dev/sdb1	2048	13441021	6719487	83	Linux
/dev/sdb2	13441022	15538173	1048576	83	Linux

$ sudo ./sdwriter_sdhc sdb 24 all